High Speed Deep Precision Machining

EPDR | Epoch Deep Radius End Mill

V max	Roughing	Semi-Finishing	Finishing	HRC	Rib. Miniature	No. of Teeth
High Speed	▽	▽▽	▽▽▽	70		2

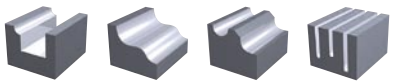

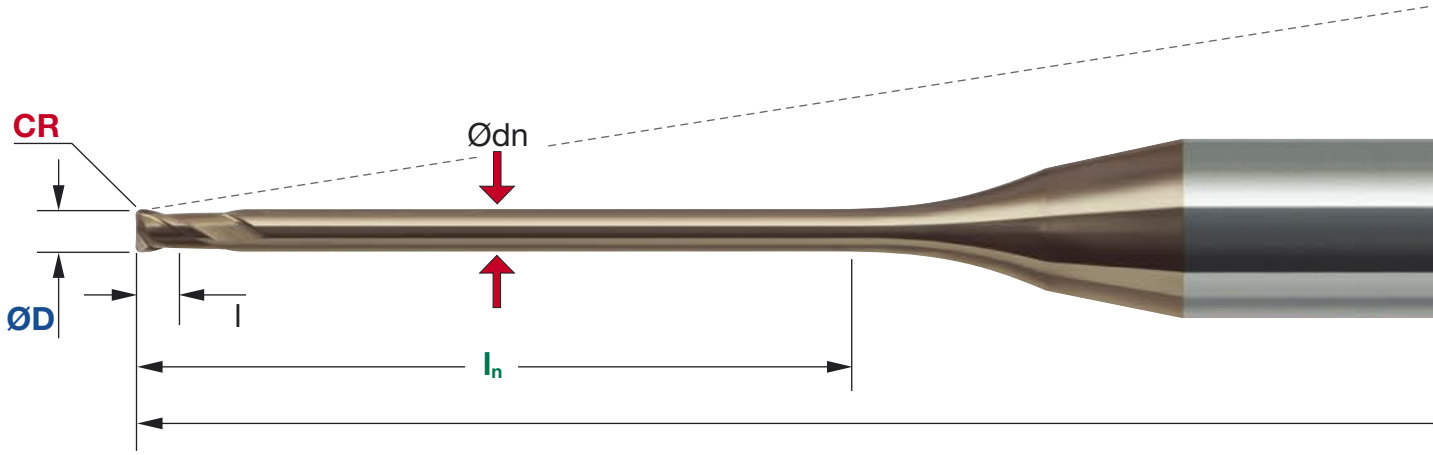

Carbide	TH45+	Rake Angle
Micro Grain	Nano-PVD Coating	Positive

Helix Angle	20°
CR	± 0.01
D	0 / -0.015
d	h5

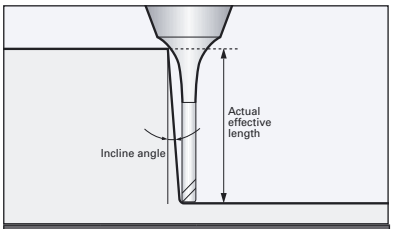

Ø 0.2 – Ø 1.0 mm

NEW	ID Code	Item Code	Size Z	ØD	ln	CR	l	Ødn	L	Ød	Actual Effective Length in Incline angles 0.5°	1°	2°	3°
	EP393	EPDR-2002-05-005	2	0.2	0.5	0.05	0.15	0.17	50	4	0.92	1.00	1.15	1.29
	EP394	EPDR-2002-1-005			1						1.63	1.79	2.09	2.37
◎	EP604	EPDR-2002-1.5-005			1.5						2.18	2.38	2.72	3.04
◎	EP605	EPDR-2002-2-005			2						2.89	3.17	3.67	4.12
	EP395	EPDR-2003-1-005		0.3	1		0.25	0.27			1.46	1.57	1.77	1.95
	EP396	EPDR-2003-2-005			2						2.73	2.95	3.34	3.68
◎	EP606	EPDR-2003-3-005			3						3.99	4.33	4.91	5.41
◎	EP607	EPDR-2004-1-01		0.4	1	0.1	0.3	0.37			1.46	1.57	1.77	1.95
	EP397	EPDR-2004-2-01			2						2.72	2.94	3.33	3.67
	EP398	EPDR-2004-3-01			3						3.81	4.08	4.53	4.91
	EP399	EPDR-2004-4-01			4						5.07	5.47	6.10	6.65
◎	EP608	EPDR-2005-1-01		0.5	1		0.35	0.47			1.46	1.56	1.76	1.93
◎	EP609	EPDR-2005-2-01			2						2.53	2.69	2.95	3.17
	EP400	EPDR-2005-3-01			3						3.81	4.08	4.53	4.91
	EP401	EPDR-2005-4-01			4						4.89	5.20	5.70	6.12
	EP402	EPDR-2005-5-01			5						6.16	6.59	7.29	7.87
	EP403	EPDR-2005-6-01			6						7.24	7.71	8.45	9.07
◎	EP610	EPDR-2006-2-01		0.6	2		0.4	0.57			2.53	2.69	2.95	3.17
	EP404	EPDR-2006-4-01			4						4.89	5.20	5.70	6.12
	EP405	EPDR-2006-6-01			6						7.24	7.71	8.45	9.07
◎	EP611	EPDR-2006-8-01			8						9.38	9.92	10.75	11.43
◎	EP612	EPDR-2008-2-02		0.8	2	0.2	0.5	0.77			2.53	2.68	2.93	3.15
	EP406	EPDR-2008-4-02			4						4.88	5.19	5.68	6.10
	EP407	EPDR-2008-6-02			6						7.01	7.39	7.98	8.46
◎	EP613	EPDR-2008-8-02			8						9.37	9.91	10.74	11.42
◎	EP614	EPDR-2008-10-02			10						11.50	12.09	13.00	13.73
◎	EP615	EPDR-2010-2-02		1	2		0.8	0.94			2.63	2.77	3.00	3.21
	EP408	EPDR-2010-4-02			4						4.74	4.94	5.27	5.54
	EP409	EPDR-2010-6-02			6						7.12	7.47	8.03	8.51
	EP410	EPDR-2010-8-02			8						9.22	9.63	10.28	10.80
	EP411	EPDR-2010-10-02			10						11.60	12.17	13.05	13.77
	EP412	EPDR-2010-12-02			12				55		13.71	14.33	15.29	16.05
◎	EP616	EPDR-2010-14-02			14						15.81	16.48	17.50	18.70
	EP413	EPDR-2010-16-02			16				60		17.91	18.62	19.70	21.35
◎	EP617	EPDR-2010-18-02			18						20.00	20.76	21.88	24.02
	EP414	EPDR-2010-20-02			20						22.09	22.88	24.06	26.66

© 2007 Hitachi Tool Engineering Europe GmbH

High Speed Deep Precision Machining

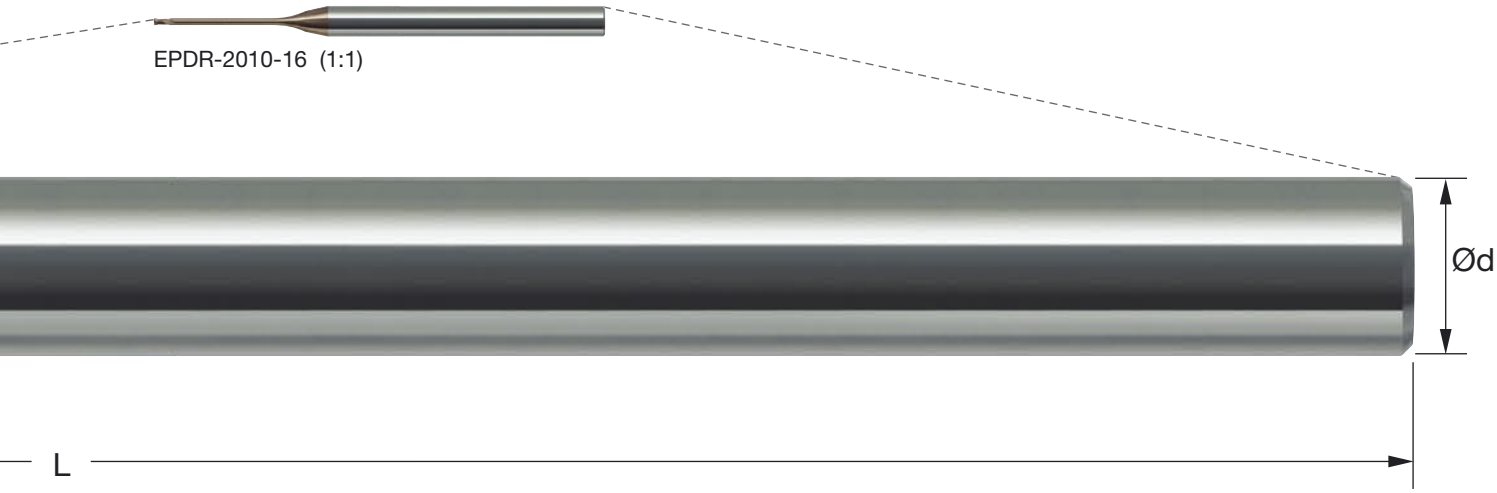

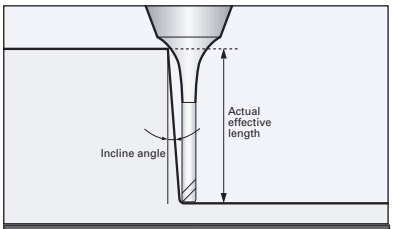

Ø 1.5 – Ø 6.0 mm

NEW	ID Code	Item Code	Size Z	ØD	l_n	CR	l	Ødn	L	Ød	Actual Effective Length in Incline angles 0.5°	1°	2°	3°
◎	EP618	EPDR-2015-4-02	2	1.5	4	0.2	1.35	1.42	50	4	4.79	4.98	5.30	5.57
	EP415	EPDR-2015-8-02			8						9.28	9.68	10.31	10.82
	EP416	EPDR-2015-12-02			12				55		13.46	13.96	14.71	16.10
	EP417	EPDR-2015-15-02			15						16.91	17.59	18.63	20.09
	EP418	EPDR-2015-20-02			20				60		22.13	22.92	24.11	x
◎	EP619	EPDR-2020-4-02		2	4		1.7	1.92	50		4.79	4.98	5.30	5.57
◎	EP620	EPDR-2020-4-05				0.5					4.78	4.96	5.26	5.53
	EP419	EPDR-2020-8-02			8	0.2					8.98	9.24	9.75	10.80
	EP420	EPDR-2020-8-05				0.5					8.94	9.22	9.69	10.70
	EP421	EPDR-2020-12-02			12	0.2			55		13.46	13.96	14.71	16.10
	EP422	EPDR-2020-12-05				0.5					13.45	13.94	14.68	16.00
	EP423	EPDR-2020-16-02			16	0.2					17.62	18.19	19.33	x
	EP424	EPDR-2020-16-05				0.5					17.61	18.18	19.27	x
	EP425	EPDR-2020-20-02			20	0.2			60		22.13	22.92	24.11	x
	EP426	EPDR-2020-20-05				0.5					22.12	22.90	24.06	x
◎	EP621	EPDR-2020-25-02			25	0.2			65		27.33	28.20	x	x
◎	EP622	EPDR-2020-25-05				0.5					27.32	28.19	x	x
◎	EP623	EPDR-2020-30-02			30	0.2			70		32.51	33.46	x	x
◎	EP624	EPDR-2020-30-05				0.5					32.50	33.45	x	x
	EP427	EPDR-2030-8-02		3	8	0.2	2.5	2.86	55	6	9.07	9.33	9.92	10.98
	EP428	EPDR-2030-8-05				0.5					9.06	9.31	9.86	10.89
	EP429	EPDR-2030-12-02			12	0.2			60		13.19	13.52	14.71	16.29
	EP430	EPDR-2030-12-05				0.5					13.18	13.51	14.65	16.19
	EP431	EPDR-2030-16-02			16	0.2					17.75	18.29	19.49	21.60
	EP432	EPDR-2030-16-05				0.5					17.74	18.27	19.43	21.50
	EP433	EPDR-2030-20-02			20	0.2			65		21.88	22.49	24.28	26.91
	EP434	EPDR-2030-20-05				0.5					21.87	22.47	24.22	26.80
	EP435	EPDR-2030-30-02			30	0.2			75		32.63	33.55	36.25	x
	EP436	EPDR-2030-30-05				0.5					32.62	33.53	36.18	x
◎	EP625	EPDR-2040-12-05		4	12		3.5	3.8	60		13.28	13.58	14.82	16.39
◎	EP626	EPDR-2040-24-05			24				70		26.10	26.73	x	x
◎	EP627	EPDR-2040-36-05			36				80		38.41	39.68	x	x
◎	EP628	EPDR-2050-20-05		5	20		4	4.75	65		21.54	22.38	x	x
◎	EP629	EPDR-2050-40-05			40				85		42.57	x	x	x
◎	EP630	EPDR-2060-18-05		6	18		5	5.7	60		x	x	x	x
◎	EP631	EPDR-2060-36-05			36				80		x	x	x	x
◎	EP632	EPDR-2060-54-05			54				100		x	x	x	x

x = no contact

© 2007 Hitachi Tool Engineering Europe GmbH